05022017

LAB RESEARCH PRODUCTS

CUTSHEET

Interior
LRP-HC-72C-TS

Front View

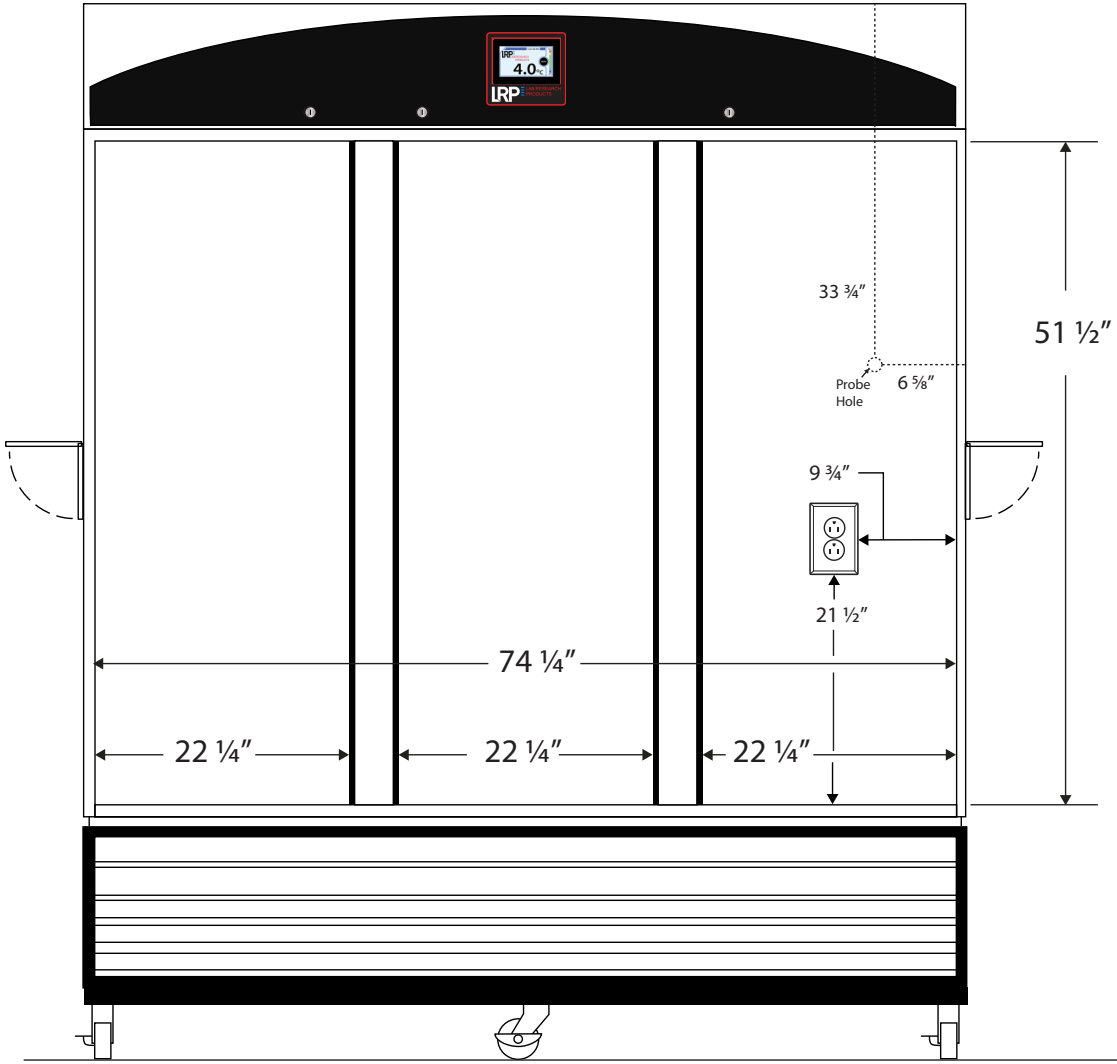

Side View

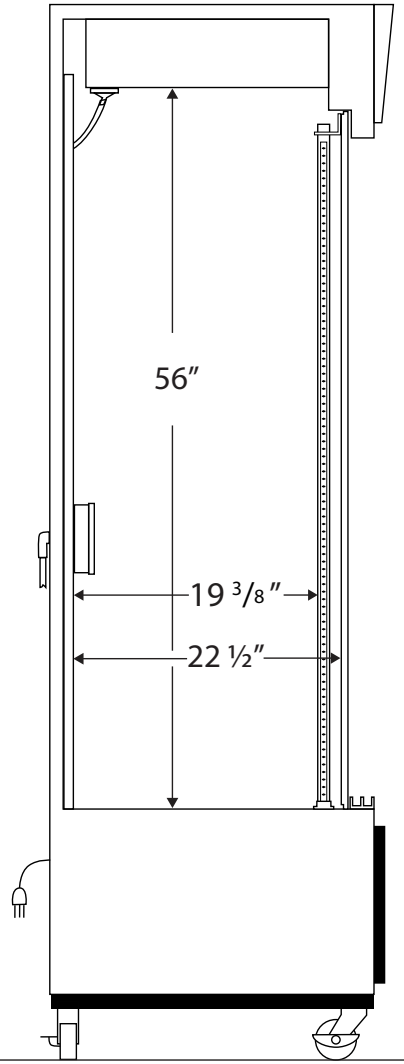

115VAC/60Hz/1PH
NEMA-5-15P

Cu. Ft	Defrost	Door	Int Door	Shelves	W"	D"	H"	Refrigerant	H.P.	Amps	Weight
72	Cycle	3 Glass	0	12 Adj	74 ¼	22 ½	56	R290	½	8.5	640 lbs.

Note: Interior dimensions are estimates and subject to change without notice